9111 Series

H.D. 2.0mm(0.079") Futurebus(+)4 Rows Female Right Angle Type

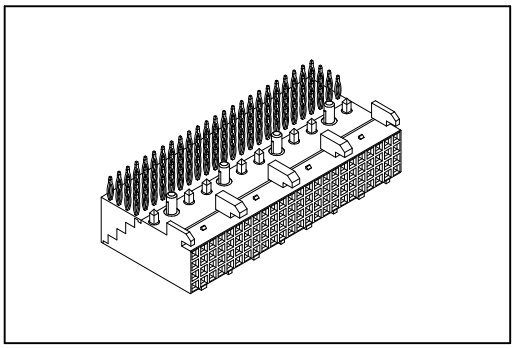

Material:

Housing: High Temperature Plastic UL94V-0.
Contacts: Copper Alloy.

Electrical Characteristics:

Current Rating: 1 A.
Dielectric Withstanding Voltage: AC 1000V.
Insulator Resistance: 1000MΩ min.
Contact Resistance: 30mΩ max.
Operating Temperature: -55°C ~+125°C.

Features:

* 2mm high density futurebus+ female right angle solder and press fit type.
* Side by side stackable.
* Push-Fit peg.

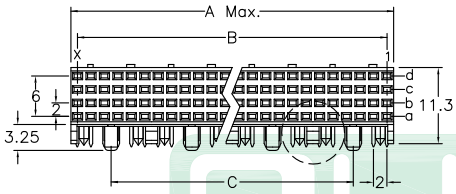

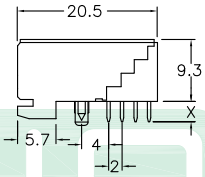

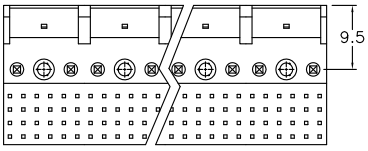

Dip Type

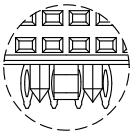

Press Fit Type

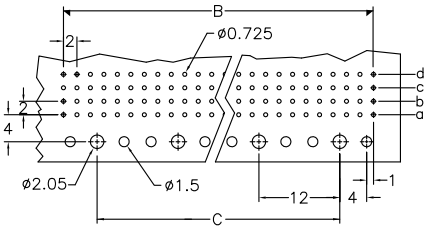

P.C. Board Layout

X Length		1	2
		2.90	3.53
"*"Available Position			
Position		Dimension	
		A	B	C
*	24	11.95	10	
*	48	23.95	22	12
*	72	35.95	34	24
*	96	47.95	46	36
*	120	59.95	58	48
*	144	71.95	70	60
*	168	83.95	82	72
*	192	95.95	94	84

Ordering information

9111-	4	2	24	1	C	10	D	U
Series	4: 4Rows	2: Female Signal	Position	1: Dip Length 2: Dip Length	C: Selective Gold Plated	10: 10 μ"	D: Dip Type P: Press Fit Type	U: Tube Package

Information including designs, specifications and components may be changed or updated without notice.