9111 Series

H.D. 2.0mm(0.079") Futurebus(+)5 Rows Female Right Angle Type

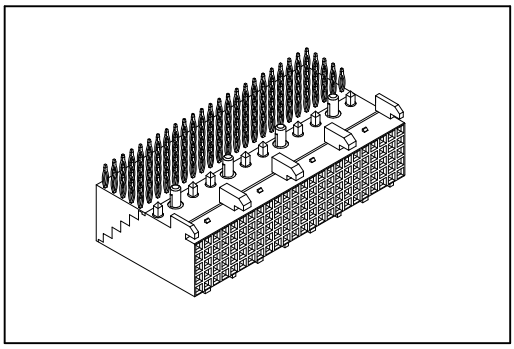

Material:

Housing: High Temperature Plastic UL94V-0.
Contacts: Copper Alloy.

Electrical Characteristics:

Current Rating: 1 A.
Dielectric Withstanding Voltage: AC 1000V.
Insulator Resistance: 1000MΩ min.
Contact Resistance: 30mΩ max.
Operating Temperature: -55°C ~+125°C.

Features:

* 2mm high density futurebus+ female right angle solder and press fit type.
* Available pin count from 30~390.
* Side by side stackable.
* Push-Fit peg.

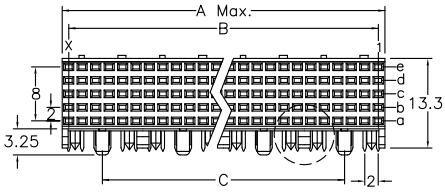

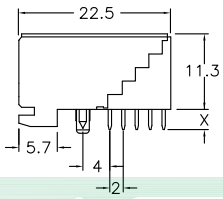

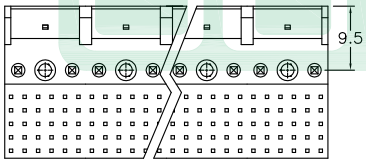

Dip Type

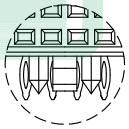

Press Fit Type

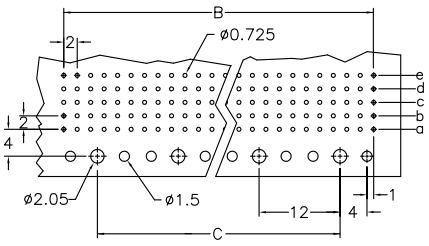

P.C. Board Layout

X Length		1		2
		2.90		3.53
"*"Available Position				
Position		Dimension		
		A	B	C
*	30	11.95	10.0	
*	60	23.95	22.0	12.0
*	90	35.95	34.0	24.0
*	120	47.95	46.0	36.0
*	150	59.95	58.0	48.0
*	180	71.95	70.0	60.0
*	210	83.95	82.0	72.0
*	240	95.95	94.0	84.0
*	270	107.95	106.0	96.0
*	300	119.95	118.0	108.0
*	330	131.95	130.0	120.0
*	360	143.95	142.0	132.0
*	390	155.95	154.0	144.0

Ordering information

9111-	5	2	30	1	C	10	D	U
Series	5: 5Rows	2: Female Signal	Position	1: Dip Length 2: Dip Length	C: Selective Gold Plated	10: 10 μ"	D: Dip Type P: Press Fit Type	U: Tube Package

Information including designs, specifications and components may be changed or updated without notice.